UART to HID Keyboard Chip CH9328

Datasheet
Version: V1.6
http://wch.cn

1. Introduction

CH9328 is a serial UART to HID keyboard chip that is identified as a standard USB HID keyboard device on computers. CH9328 supports one-way data transmission, it can receive the serial UART data (such as ASCII code), and according to the HID keyboard device specification, the data is packaged into a standard keyboard code and uploaded to the computer through the USB port. Through the provided Windows software, the user can also configure the chip's VID, PID, and various string descriptors. The figure below shows the diagram of its general application.

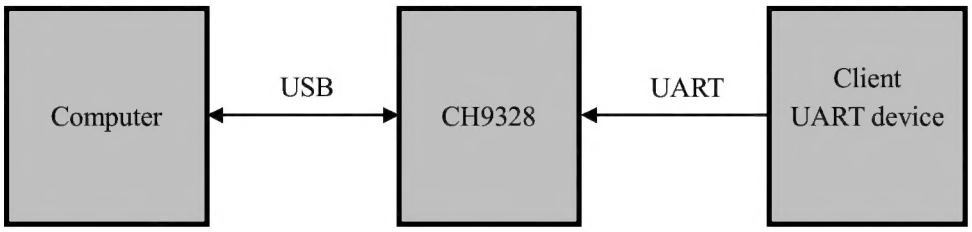

2. Features

- Supports 12Mbps full-speed USB device interface, USB 2.0 compatible, built-in crystal oscillator.
- Default serial communication baud rate is 9600bps, which supports multiple serial communication formats and common baud rate settings.
- Supports 5V and 3.3V supply voltage.
- Supports to configure the VID, PID, and various USB string descriptors of the chip.
- Supports to configure the default baud rate of the chip.
- Complies with USB related specifications and HID device related specifications.
- Multiple operating modes to apply to different requirements, can simulate full keyboard function.
- RoHS compliant SOP-16 lead-free package.

3. Package

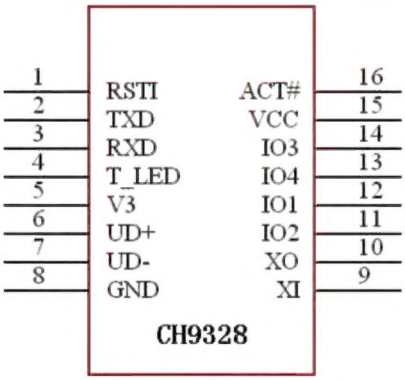

Package	Width Of Plastic		Pitch Of Pin		Instruction Of Package	Ordering Information
SOP16	3.9mm	150mil	1.27mm	50mil	Small outline 16-pin patch	CH9328

4. Pin Out

Pin No.	Pin Name	Pin Type	Pin Description
15	VCC	Power	Power supply voltage input, requires an external 0.1uF decoupling capacitor
8	GND	Power	Ground
5	V3	Power	Connect to VCC when VCC is 3V3, connect to 0.1uF decoupling capacitor when VCC is 5V
6	UD+	USB signal	Connect to USB D+ Signal directly
7	UD-	USB signal	Connect to USB D- Signal directly
1	RSTI	Input	External reset input, active low, built-in pull-up resistor
2	TXD	Output	Invalid pin, not used actually
3	RXD	Input	Serial data input, built-in pull-up resistor
4	T_LED	Output	Serial UART send status output, active high
9	XI	Input	For chip below V1.4: Input of crystal oscillator, requires an external crystal and oscillation capacitor For chip V1.4 and above: chip has integrated crystal oscillator, suspended
10	XO	Output	For chip below V1.4: Reverse output of crystal oscillator, requires an external crystal and oscillation capacitor For chip V1.4 and above: chip has integrated crystal oscillator, suspended
14	IO3	Bi-direction	**User-configurable pin and operating mode configuration pin** The chip automatically detects the level status of the pin after power-on by default to configure the operating mode of the chip. After the USB configuration is completed, it can be configured as GPIO according to needs
13	IO4	Bi-direction	**User-configurable pin and operating mode configuration pin** The chip automatically detects the level status of the pin after power-on by default to configure the operating mode of the chip. After the USB configuration is completed, it can be configured as GPIO according to needs
12	IO1	Bi-direction	**User-configurable pin and speed configuration pin** The chip automatically detects the level status of the pin after power-on by default to configure the upload speed of the chip(when the pin is high, chip works in normal speed mode, otherwise works in high speed mode, the speed is about twice that of the normal mode). After the USB configuration is completed, it can be configured as GPIO according to needs
11	IO2	Bi-direction	**User-configurable pin and operating mode configuration pin** The chip automatically detects the level status of the pin after power-on by default to configure the operating mode of the chip. After the USB configuration is completed, it can be configured as GPIO according to needs
16	ACT#	Output	USB configuration completed status output, active low

5. Function Description

CH9328 has integrated power-on reset circuit.

When CH9328 uses 5V supply voltage, the V3 pin externally connects with decoupling capacitor with a capacity of about 0.1uF. When using 3.3V supply voltage, the V3 connects with VCC, inputs 3.3V power supply at the same time.

The ACT# pin of the CH9328 is the status output of USB device configuration completion that indicates that the USB device has successfully connected to the computer.

CH9328 has integrated independent transmit-receive buffer and supports simplex, half-duplex and full duplex

UART communication. Serial data contains one low-level start bit, 5, 6, 7 or 8 data bits and 1 or 2 high-level stop bits, supports odd/even/mark/space parity. The default baud rate of CH9328 is 9600bps, it supports common baud rate: 50, 75, 100, 110, 134.5, 150, 300, 600, 900, 1200, 1800, 2400, 3600, 4800, 9600, 14400, 19200, 28800, 33600, 38400, 56000, 57600, 76800 and 115200. The baud rate error of the serial port transmitting signal is less than 0.3%, and the allowable baud rate error of the serial port receiving signal is not more than 2%.

CH9328 has integrated a related firmware for UART-to-USB HID communication, and which is a simple solution for UART-to-HID device. It also has integrated all the peripheral circuits required by the USB bus, including PLL and 24MHz USB clock, serial matching resistors for D+ and D-signals and 1.5KΩ pull-up resistor for Device, etc, and integrated crystal oscillator. The peripheral circuit is simple.

CH9328 complies with related technical specifications and supports plug-and-play. The Windows/Linux /Android/MAC OS has pre-installed with the corresponding drivers, after connection, CH9328 can be used with the corresponding software.

IO1 is user-configurable pin and speed configuration pin. CH9328 automatically detects the level status of the pin after power-on by default to configure the upload speed of the chip, when the pin is high, chip works in normal speed mode, otherwise works in high speed mode, the speed is about twice that of the normal mode. The normal speed mode is recommended for general applications and the high speed mode for special applications. After the USB configuration is completed, it can be configured as GPIO as needed, and used for input detection and output control of level.

IO2, IO3, and IO4 are user-configurable pins and operating mode configuration pins. CH9328 automatically detects the level status of the pin after power-on by default, which is used to configure the operating mode of the chip. After the USB configuration is completed, it can be configured as GPIO as needed through the PC software, and used for input detection and output control of level.

Operating mode configuration and description:

Mode	IO2 level	IO3 level	IO4 level	Function Description
Mode0	1	1	1	This mode only supports converting the characters corresponding to visible ASCII codes (such as a-z, 0-9, @, #, $, etc.) into standard USB keyboard values. Special features: when the received serial data encounters 0x1B, the data after 0x1B in the current packet is discarded, and 0x1B is converted into the “Enter” key.
Mode1	1	0	1	This mode only supports converting the characters corresponding to visible ASCII codes (such as a-z, 0-9, @, #, $, etc.) into standard USB keyboard values.
Mode2	1	1	0	This mode only supports converting the characters corresponding to visible ASCII codes (such as a-z, 0-9, @, #, $, etc.) into standard USB keyboard values. Special features: when the received serial data encounters 0x28, 0x28 is converted into the “Enter” key.

Mode3	0	1	1	This mode is a transparent transmission mode, not only for transferring visible ASCII characters. This mode can implement the standard USB full keyboard function. Every 8 bytes of serial UART data forms one packet. After receiving 8 bytes, the chip will directly package and upload the data through the USB port. Namely, the chip is in transparent transmission mode, and the serial UART data is not analyzed and converted, and is directly uploaded in a packet of 8 bytes. Therefore, the serial UART data must be sent in accordance with the standard USB keyboard data packet. For example, simulating "A" pressed, the serial UART sends data packet: 0x00, 0x00, 0x04, 0x00, 0x00, 0x00, 0x00, 0x00; For example, simulating "A" released, the serial UART sends data packet: 0x00, 0x00, 0x00, 0x00, 0x00, 0x00, 0x00, 0x00; For example, simulating "A+SHIFT" pressed at the same time, the serial UART sends data packet: 0x02, 0x00, 0x04, 0x00, 0x00, 0x00, 0x00, 0x00; For example, simulating "A+SHIFT" released at the same time, the serial UART sends data packet: 0x00, 0x00, 0x00, 0x00, 0x00, 0x00, 0x00, 0x00;

Through the provided PC software, the user can customize the chip's VID, PID and various string descriptors. You can also set the default serial communication baud rate after the chip is powered on. After this information is configured, it will be permanently stored inside the chip and will not be lost even if power off, unless it is reconfigured. It has not been set, the chip's default VID, PID, and string descriptors are enabled.

For the default serial baud rate, VID, PID and various string descriptor settings, as well as the usage of reserved IO pins, please refer to the provided software.

6. Parameters

6.1. Absolute Maximum Ratings

(Critical state or exceeding maximum can cause chip to not work or even be damaged)

Name	Parameter Description	Min.	Max.	Unit
TA	Operating ambient temperature	-40	85	℃
TS	Storage ambient temperature	-55	100	℃
VCC	Supply voltage(VCC connects to power, GND to ground)	-0.5	5.5	V
VIO	Voltage of input or output pin	-0.5	VCC+0.5	V

6.2. Electrical Parameters

(Test Conditions: TA=25℃, VCC=5V, exclude pins connected to USB bus)

Name	Parameter Description	Min.	Typ.	Max.	Unit
VCC	Supply voltage	3.0	5	5.3	V
ICC	Static supply current		15	30	mA

VIL	Input low voltage	-0.5		0.8	V
VIH	Input high voltage	2.0		VCC+0.5	V
VOL	Output low voltage (8mA draw current)			0.5	V
VOH	Output high voltage (8mA output current)	VCC-0.5			V
IUPrxd	Input current of RXD with built-in pull-up resistor	40	80	160	uA
IDNrst	Input current of RSTI with built-in pull-down resistor	-10	-150	-240	uA

7. Application

7.1. UART to HID Keyboard

The figure below shows the schematic diagram that CH9328 realizes UART- to -HID keyboard.

P1 is USB port, USB bus contains a pair of 5V power lines and a pair of data signal lines. Usually, the color of +5V power line is red, the black one is ground. D+ signal line is green and the D- signal line is white. The max supply current provided by USB bus is up to 500mA. Generally, CH9328 and low-power USB products can directly use the 5V power supplied by USB bus. If the USB products use standing power provided by other supply methods, CH9328 also can use this power. If the USB bus power and standing power are necessary at the same time, connecting a 1Ω resistor between 5V power line of USB bus and 5V standing power line of USB product, and directly connecting the ground lines of two powers.

P2 is TTL serial port, RXD is serial data received pin of CH9328, TXD is not used actually.

P3 are four reserved GPIO pins that user can configure and use.

The capacitor C3 is 0.1uF, used for internal power node decoupling of CH9328. Capacitor C2 is 0.1uF, used for external power decoupling. Crystal X1, resistor R1 and capacitor C4 are used for clock oscillation circuit. X1 is 12MHz quartz or ceramic crystal, C4 and C5 are monolithic or high frequency ceramic capacitors with a capacity of 20~47pF. If X1 selects the ceramic crystal with low cost, the capacity of C4 and C5 must use the recommended value of crystal manufacturer and generally is 47pF.

Note: For CH9328 V1.4 and above, has integrated crystal oscillator, so X1, C4, C5 are not required and it is recommended to reserve location.

Capacitor C1 is optional, only used to extend the reset time of CH9328 when power-on.

Resistor R2 and LED L1 are optional, only used to indicate the USB connection status.

When designing the PCB, pay attention to: decoupling capacitor C2 and C3 get as close to connected pins of CH9328; making sure D+ and D- signal lines are close to the parallel wiring and providing ground or copper on both sides to reduce signal interference from the outside; the signal line length of XI and XO pin should be keep as short as possible. In order to reduce the high frequency interference, arranging the ground or copper around the relevant components.

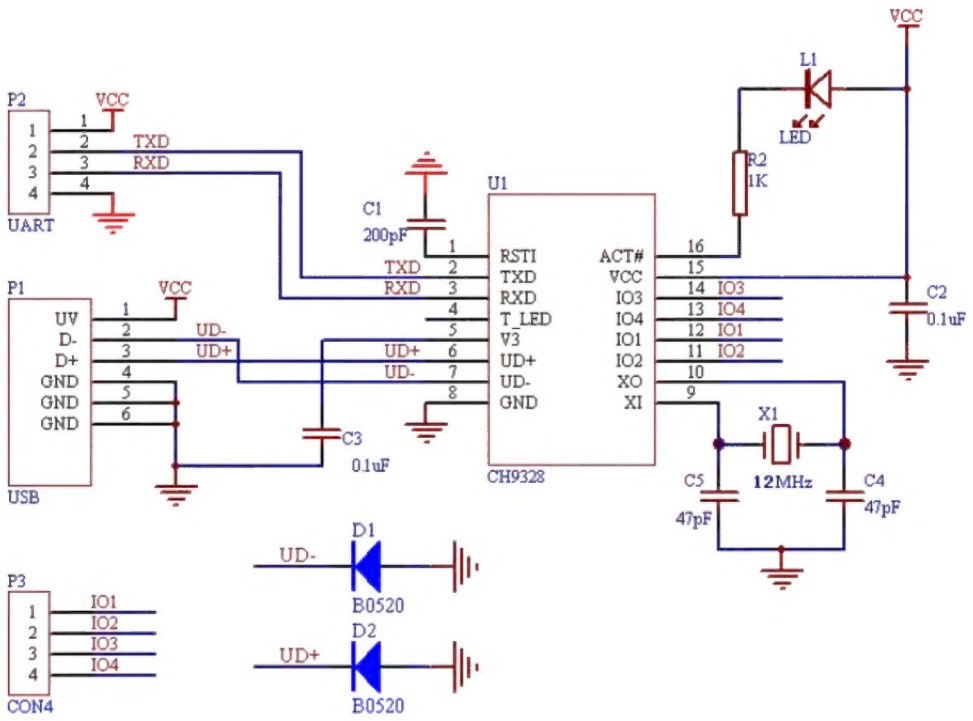
VCC
L1
LED
R2
1K
P2
UART
TXD
RXD
C1
200pF
U1
RSTI
TXD
RXD
T_LED
V3
UD+
UD-
GND
ACT#
VCC
IO3
IO4
IO1
IO2
XO
XI
C2
0.1uF
P1
USB
UV
D-
D+
GND
UD-
UD+
C3
0.1uF
CH9328
X1
12MHz
C5
47pF
C4
47pF
D1
B0520
D2
B0520
P3
CON4
IO1
IO2
IO3
IO4